DWG.NO. EZZ902345-1/1

Third Angle Projection
Dimensions in mm

Model No.	Max Appli. Motor(kW)	Rated output capacity(kW)	Terminal Symbol: AC Terminals	DC Terminals	Voltage Detection Terminals	Cooling Fan	Mass (kg)
CIMR-D#2□0005B	3.7	5	R/L1 S/L2 T/L3	⊖⊖ ⊕⊕	r1/ℓ11 s1/ℓ21 t1/ℓ31	2	4.8
CIMR-D#2□0010B	7.5	10	R/L1 S/L2 T/L3	⊖⊖ ⊕⊕	r1/ℓ11 s1/ℓ21 t1/ℓ31	2	4.9
CIMR-D#4□0005B	3.7	5	R/L1 S/L2 T/L3	⊖⊖ ⊕⊕	r1/ℓ11 s1/ℓ21 t1/ℓ31	2	4.7
CIMR-D#4□0010B	7.5	10	R/L1 S/L2 T/L3	⊖⊖ ⊕⊕	r1/ℓ11 s1/ℓ21 t1/ℓ31	2	4.9

#:A to Z
□:A to Z

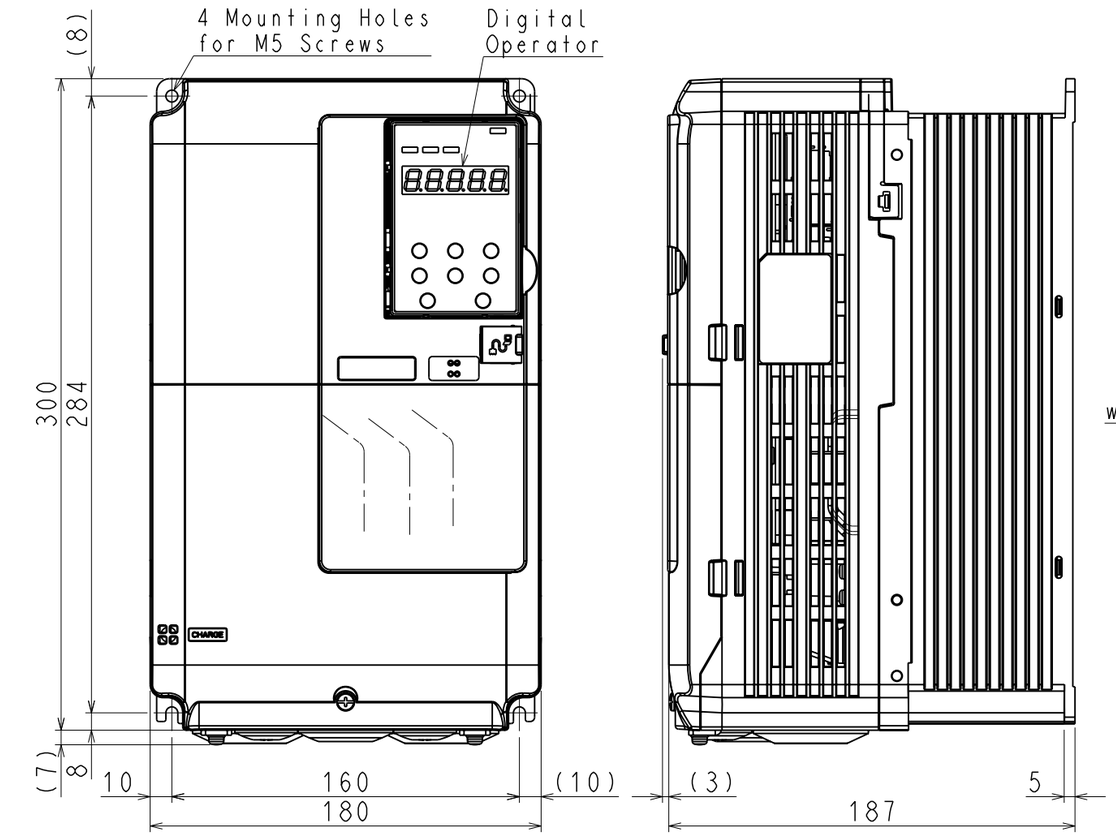

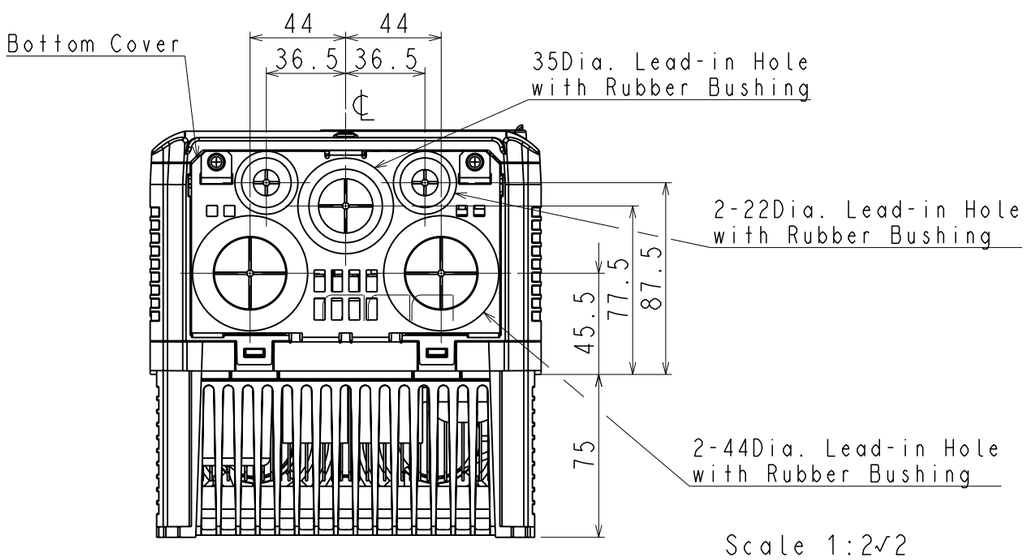

Scale 1:2√2

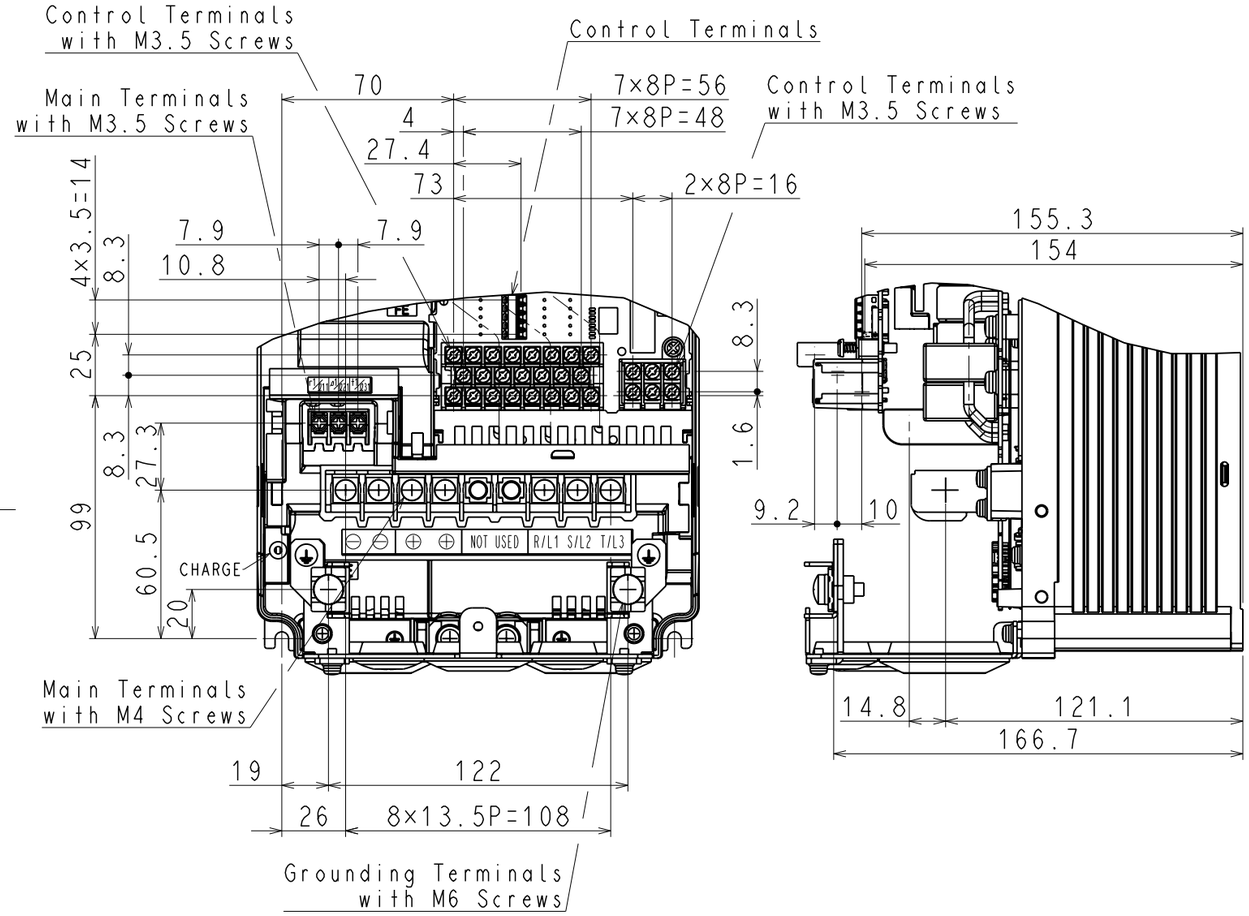

Detail (without Front cover)

Scale 1:2.5

REVISIONS			
2	Sep,18,2012	H.Miyazaki	

SCALE - : -

YASKAWA

DRAW.	Sep.4.2012	H.Miyazaki
CHECK	–	T.Yanagimoto
APPR.	–	M.Kojyo

TITLE D1000 IP20 TYPE
DIMENSION DIAGRAM

DWG.NO. EZZ902345 1/1

REV. 2